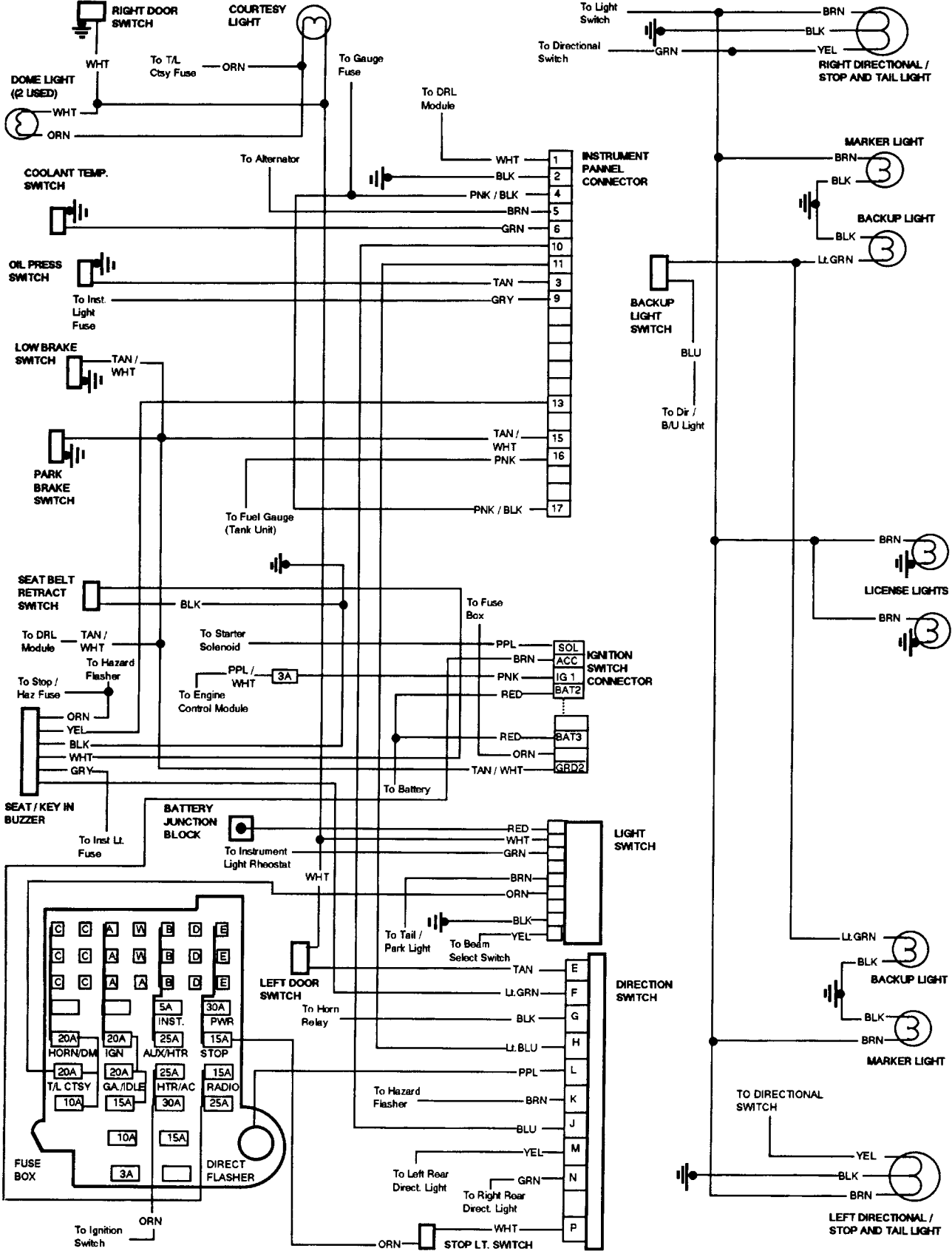
RIGHT DOOR SWITCH
COURTESY LIGHT
WHT
To T/L Ctsy Fuse
ORN
DOME LIGHT (2 USED)
WHT
ORN
To Gauge Fuse
To DRL Module
To Alternator
COOLANT TEMP. SWITCH
OIL PRESS SWITCH
To Inst. Light Fuse
LOW BRAKE SWITCH
TAN / WHT
PARK BRAKE SWITCH
To Fuel Gauge (Tank Unit)
SEAT BELT RETRACT SWITCH
BLK
To DRL Module
TAN / WHT
To Hazard Flasher
To Stop / Haz Fuse
ORN
YEL
BLK
WHT
GRY
SEAT / KEY IN BUZZER
To Inst Lt. Fuse
To Starter Solenoid
PPL / WHT
3A
To Engine Control Module
To Fuse Box
To Battery
BATTERY JUNCTION BLOCK
To Instrument Light Rheostat
WHT
LEFT DOOR SWITCH
To Horn Relay
To Tail / Park Light
To Beam Select Switch
To Hazard Flasher
To Left Rear Direct. Light
To Right Rear Direct. Light
To Ignition Switch
ORN
STOP LT. SWITCH
FUSE BOX
DIRECT FLASHER
INSTRUMENT PANNEL CONNECTOR
WHT 1
BLK 2
PNK / BLK 4
BRN 5
GRN 6
10
11
TAN 3
GRY 9
13
TAN / WHT 15
PNK 16
PNK / BLK 17
IGNITION SWITCH CONNECTOR
SOL
ACC
IG 1
BAT2
PPL
BRN
PNK
RED
BAT3
RED
ORN
GRD2
TAN / WHT
LIGHT SWITCH
RED
WHT
GRN
BRN
ORN
BLK
YEL
DIRECTION SWITCH
TAN E
Lt.GRN F
BLK G
Lt.BLU H
PPL L
BRN K
BLU J
YEL M
GRN N
WHT P
To Light Switch
To Directional Switch
BRN
BLK
GRN
YEL
RIGHT DIRECTIONAL / STOP AND TAIL LIGHT
MARKER LIGHT
BRN
BLK
BACKUP LIGHT
BLK
Lt.GRN
BACKUP LIGHT SWITCH
BLU
To Dir / B/U Light
BRN
LICENSE LIGHTS
BRN
Lt.GRN
BLK
BACKUP LIGHT
BLK
BRN
MARKER LIGHT
TO DIRECTIONAL SWITCH
YEL
BLK
BRN
LEFT DIRECTIONAL / STOP AND TAIL LIGHT
C C A W B D E
C C A W B D E
C C A A B D E
5A INST.
30A PWR
20A HORN/DM
20A IGN
25A AUX/HTR
15A STOP
20A T/L CTSY
20A GA./IDLE
25A HTR/AC
15A RADIO
10A
15A
30A
25A
10A
15A
3A